SENSOR + WHEEL MAGNET SUPPORT

M40296 (sensor). WEIGHT : 27 g. (sensor with the battery).
M40375 (wheel magnet support). WEIGHT : 5 g.

SPARE PARTS REFERENCES

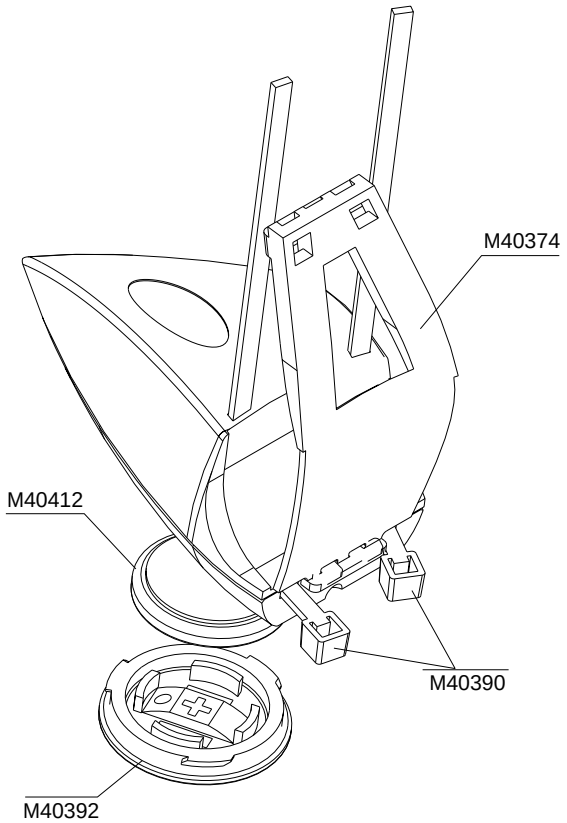

MAINTENANCE

TOOLS NEEDED :

- 1 pair of pliers.
- 1 cutter.

Replacing the rubber support :

1. Cut the fixing collars with the cutter and remove them.
2. Remove the sensor and remove the rubber support from the sensor rims.
3. Replace the support and insert the sensor pins properly in the mounting bracket slots.
4. Install the new fixing collars and attach the sensor on the bike fork (see installing instructions).

Replacing the battery or battery cover :

1. Remove the battery cover by unscrewing it counter clockwise (1/4 turn) with the new battery.
2. Insert the battery, + pole towards the outside.
3. Tighten the battery cover (1/4 turn) clockwise.

It is important to do the entire quarter turn to keep it waterproof.