DERAILLEUR

M40699 - WEIGHT : 245 g. (with the battery).
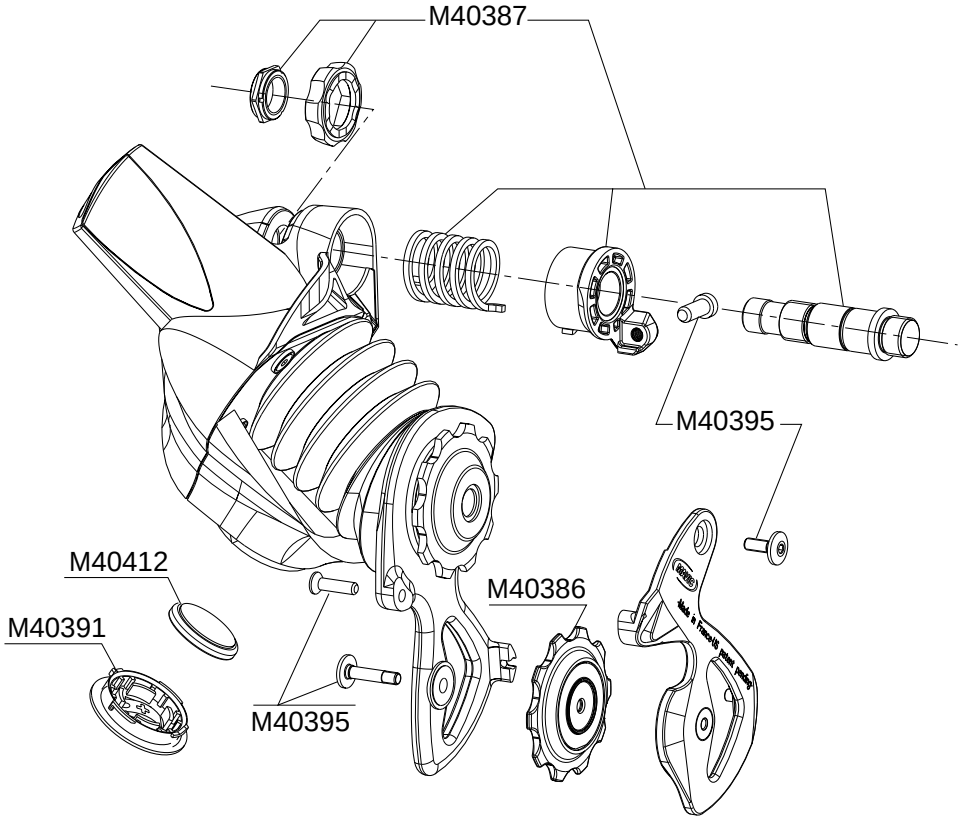
SPARE PARTS REFERENCES